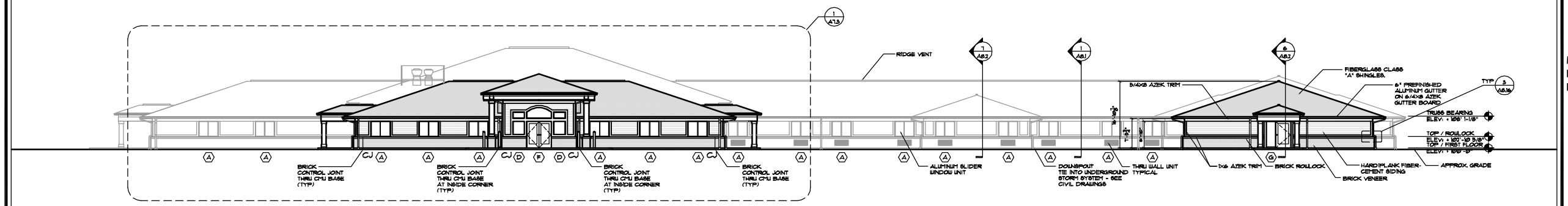

Elevation 1
Scales 3/32"=1'-0"

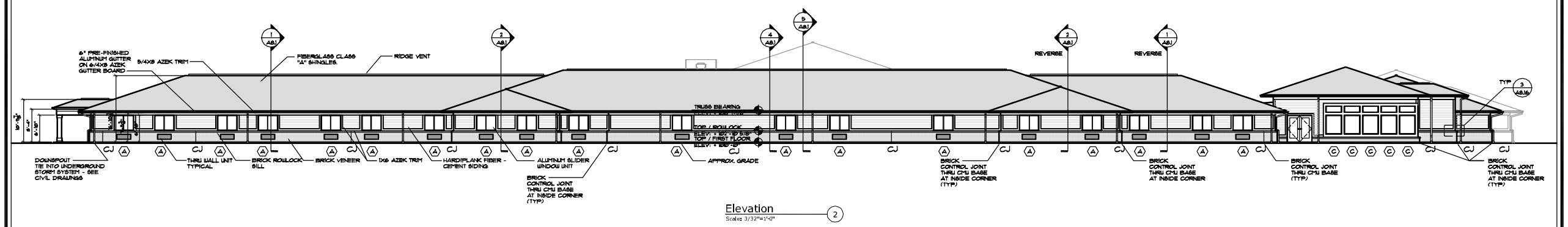

Elevation 2
Scales 3/32"=1'-0"

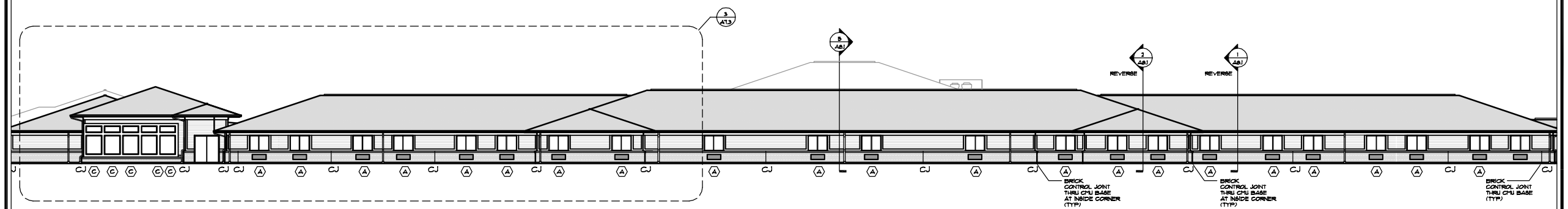

Elevation 3
Scales 3/32"=1'-0"

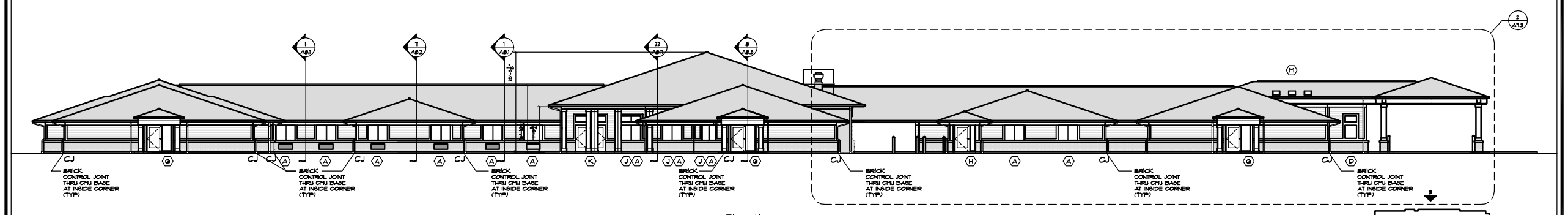

Elevation 4
Scales 3/32"=1'-0"

GUTTER AND DOWNSPOUT NOTES:

1. GUTTER - 6" ALUMINUM "K" PROFILE IN STOCK 42"H X 6"W
2. DOWNSPOUT - 5" ALUMINUM CORRUGATED RECTANGULAR PROFILE IN STOCK 3½" X 5".
3. SEE ROOF PLAN A6.1 FOR EXACT LOCATIONS OF ALL GUTTER AND DOWNSPOUTS. THE DISTANCE BETWEEN TWO DOWNSPOUTS TO BE 50' MAXIMUM, 60' MAX. IN EXTREME LOCATIONS.

BRICK CONTROL JOINT (CJ) NOTES:

1. INSTALL 1/2" BRICK CONTROL JOINTS LOCATED WHERE AS SHOWN ON ELEVATIONS WITH SEALANT AND BACKER ROD TO FILL THE ENTIRE LENGTH OF THE CONTROL JOINT.
2. INSTALL ADDITIONAL MASONRY TIES ALONG BOTH BRICK SIDES OF THE CONTROL JOINT TO SECURE FACE BRICK TO THE BACK UP WALL STUD.

ROOFING NOTES:

1. INSTALL 40 MIL ICE / WATER SHIELD 4'-0" WIDE ON ROOF DECK AT EAVE EDGE, ROOF VALLEY, RAKE EDGE, CRICKET, AROUND SKYLIGHTS, ECT. AS ADDITIONAL MEASURE TO THE ROOF FELT PRIOR TO INSTALL ROOF SHINGLES.
2. ALL ROOF VALLEYS ARE TO BE CLOSED SHINGLE VALLEYS. SEE ROOF SHINGLE TILE SPECS FOR DETAILS.

WINDOW LEGEND:

(X) WINDOW TYPE
SEE SHEET A11 FOR WINDOW SCHEDULE.

Key Plan
N. T. S.

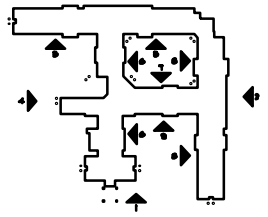

Michael A. Finn AIA. LEED AP

STATE OF OHIO MICHAEL A. FINN 3172 REGISTERED ARCHITECT

Digitally signed by Michael A. Finn AIA LEED AP
DN: cn=Michael A. Finn AIA. LEED AP, o=PFB Architects Inc., ou, email=mfinn@pfbinc.com, c=US
Date: 2011.08.05 15:57:16 -04'00'

pfb architects
Cincinnati • Chicago
652 State Avenue • Cincinnati, Ohio 45204
Tel: (513) 861-3200 • Fax: (513) 861-4403 • www.pfbarchitects.com

Liberty Nursing Center of Colerain

Livingston Road
Cincinnati, Ohio

REVISIONS

Exterior Elevations

Review Documents

DATE:	08.05.11
SCALE:	As Noted
COMMISSION NO.	3300.00
DRAWN BY:	PFS

Sheet #
A7.1